MADE IN EUROPE

MORTUARY EQUIPMENTS

HYDRATORIUM SERIES
AUTOPSY TABLE WITH REFRIGERATOR



ISO 9001 CERTIFIED

StahlLab
Medizinische Geräte

STAINLESS STEEL
LABORATORY DEVICES & FURNITURES

"STRENGTH IN DESIGN, CLARITY IN DIAGNOSTICS."

WWW.STAHL-LAB.COM
ATATÜRK MAH. ERTUĞRUL GAZİ SK. METROPOL ISTANBUL SİTESİ C1 B. NO: 2B/376 ATAŞEHİR / İSTANBUL
TEL:+90 216 641 61 27 | INFO@STAHL-LAB.COM | WWW.STAHL-LAB.COM
WP:+90 546 287 69 45

SERIE-1

AUTOPSY TABLE WITH REFRIGERATOR



STAHL-LAB | AUTOPSY TABLE WITH REFRIGERATOR

Advanced Autopsy Solutions. Intelligent Design. Integrated Refrigeration.
The STAHL-LAB Autopsy Table with Refrigerator is an innovative, multifunctional solution designed to combine a professional autopsy examination workstation with an integrated mortuary refrigeration system in one compact, space-efficient unit.

Engineered for modern pathology departments, forensic laboratories, hospitals, and mortuary facilities, this advanced system delivers exceptional functionality, hygienic performance, and operational convenience while maintaining STAHL-LAB's commitment to premium materials, precision engineering, and distinctive design.





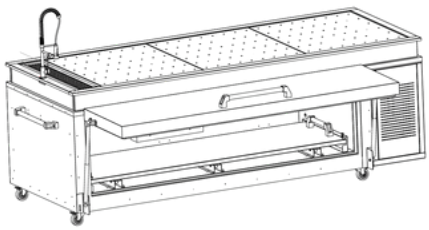

MOTOR POSION : REAR

SERIE-1

Premium Stainless Steel Construction

Manufactured with high-grade stainless steel, the unit is designed for durability, corrosion resistance, and easy cleaning.

- Autopsy Working Surface: AISI 316 stainless steel, 2.0 mm thickness, offering enhanced resistance to chemicals and cleaning agents.
- Main Structure: AISI 304 stainless steel, 1.0 mm thickness, providing structural durability and a professional hygienic finish.
- Hygienic Design: Smooth, accessible surfaces facilitate routine cleaning and disinfection.

Integrated Mortuary Refrigeration System

The lower compartment incorporates a refrigeration system designed for the temporary refrigerated storage of a deceased body.

- Operating Temperature: 0°C to +4°C.
- Integrated Refrigeration: Eliminates the need for a separate standalone mortuary refrigerator.
- Digital Temperature Control: Electronic temperature regulation for convenient monitoring and adjustment.
- Space-Saving Configuration: Combines examination and refrigerated storage functions within a single unit.

Professional Autopsy Examination Workstation

The upper section provides a robust, stainless steel working area designed to support professional post-mortem examinations and forensic procedures.
Its practical construction facilitates cleaning, supports hygienic working practices, and enables efficient use of available workspace.

Two Essential Functions. One Intelligent Solution.

Unlike conventional installations requiring separate autopsy tables and mortuary refrigeration cabinets, the STAHL-LAB integrated system brings both functions together in one practical design.

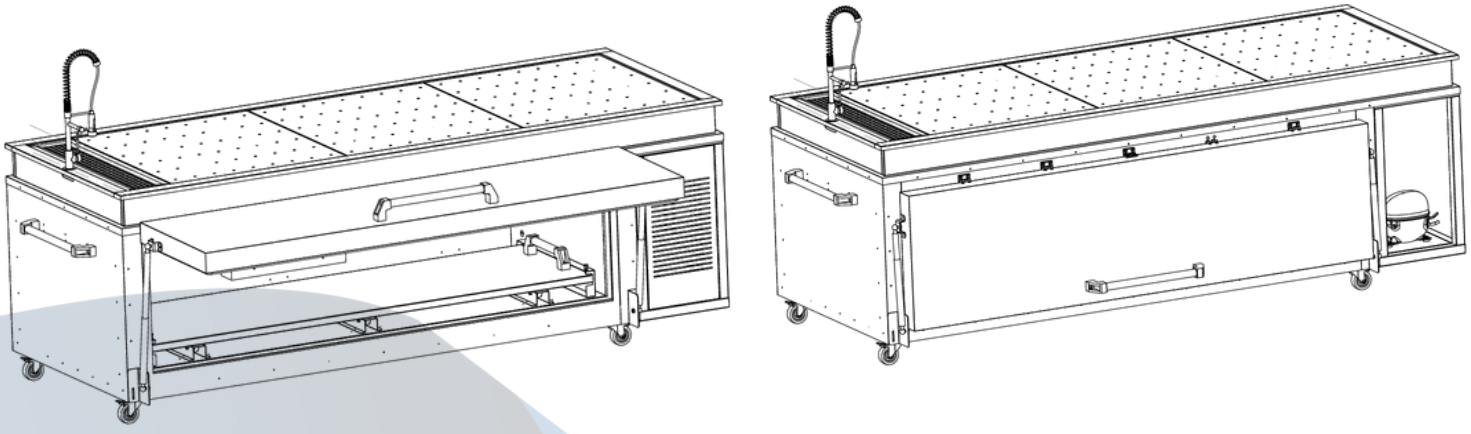

SERIE-1

Key Advantages

- Integrated autopsy examination and refrigerated storage.
- Optimized utilization of laboratory and mortuary space.
- Premium AISI 316 and AISI 304 stainless steel construction.
- Digital refrigeration temperature control.
- Durable construction for demanding professional environments.
- Streamlined workflow between examination and refrigerated storage.
- Modern, distinctive STAHL-LAB industrial design.

Designed for Professional Applications

Ideal for:

- Hospital pathology departments
- Forensic medicine institutes
- Mortuary and post-mortem facilities
- Medical universities and research institutions
- Specialized healthcare and examination facilities

Innovation Through Design

At STAHL-LAB, we believe advanced laboratory equipment should deliver more than basic functionality. Our Autopsy Table with Refrigerator reflects this philosophy by integrating two essential mortuary functions into a single, carefully engineered system.

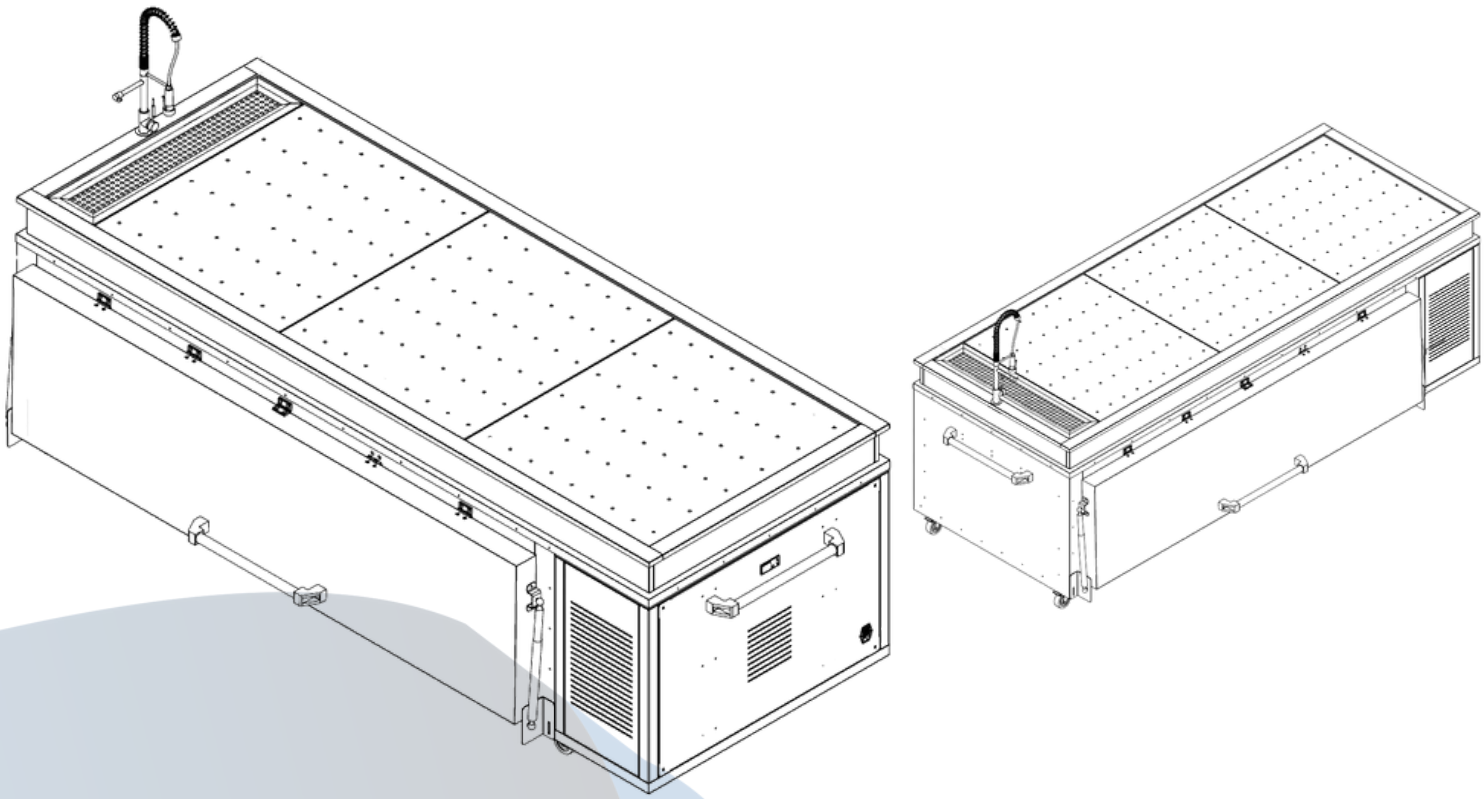

SERIE-1



WWW.STAHL-LAB.COM
INFO@STAHL-LAB.COM



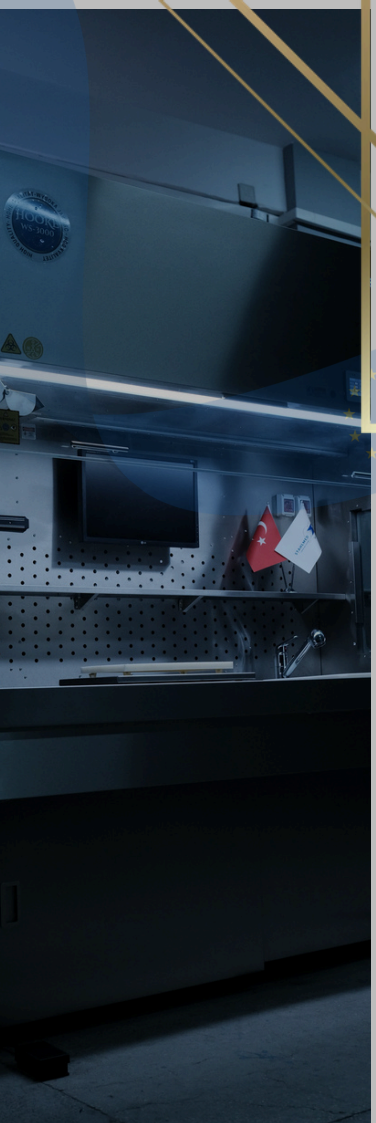





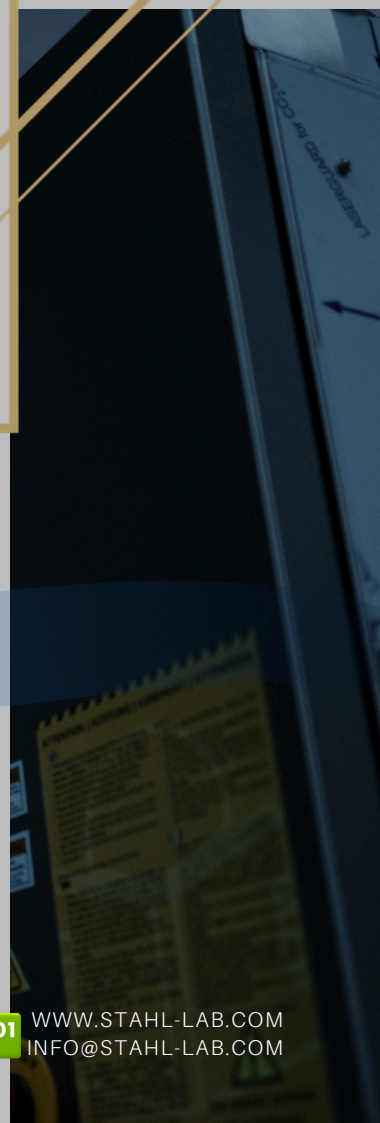

WWW.STAHL-LAB.COM
INFO@STAHL-LAB.COM

CATALOGUE

YEAR 2026

"STRENGTH IN DESIGN, CLARITY IN DIAGNOSTICS."

Stahl-Lab

LABORATORY SYSTEMS