PATHOLYSIS

FIX DOUBLE

GROSSING WORKSTATION

"STRENGTH IN DESIGN, CLARITY IN DIAGNOSTICS."



MADE IN EUROPE

ISO 9001 CERTIFIED

StahlLab
Medizinische Geräte

STAINLESS STEEL

LABORATORY DEVICES & FURNITURES

WWW.STAHL-LAB.COM
ATATÜRK MAH. ERTUĞRUL GAZİ SK. METROPOL ISTANBUL SİTESİ C1 B. NO: 2B/376 ATAŞEHİR / İSTANBUL
TEL:+90 216 641 61 27 | INFO@STAHL-LAB.COM | WWW.STAHL-LAB.COM
WP:+90 546 287 69 45

NEW

ARRIVAL

NEW

FORMALIN EXPOSURE?
NO.

FORMOL-X

FULLY AUTOMATED FORMALIN PREPARATION AND DISPENSING DEVICE.

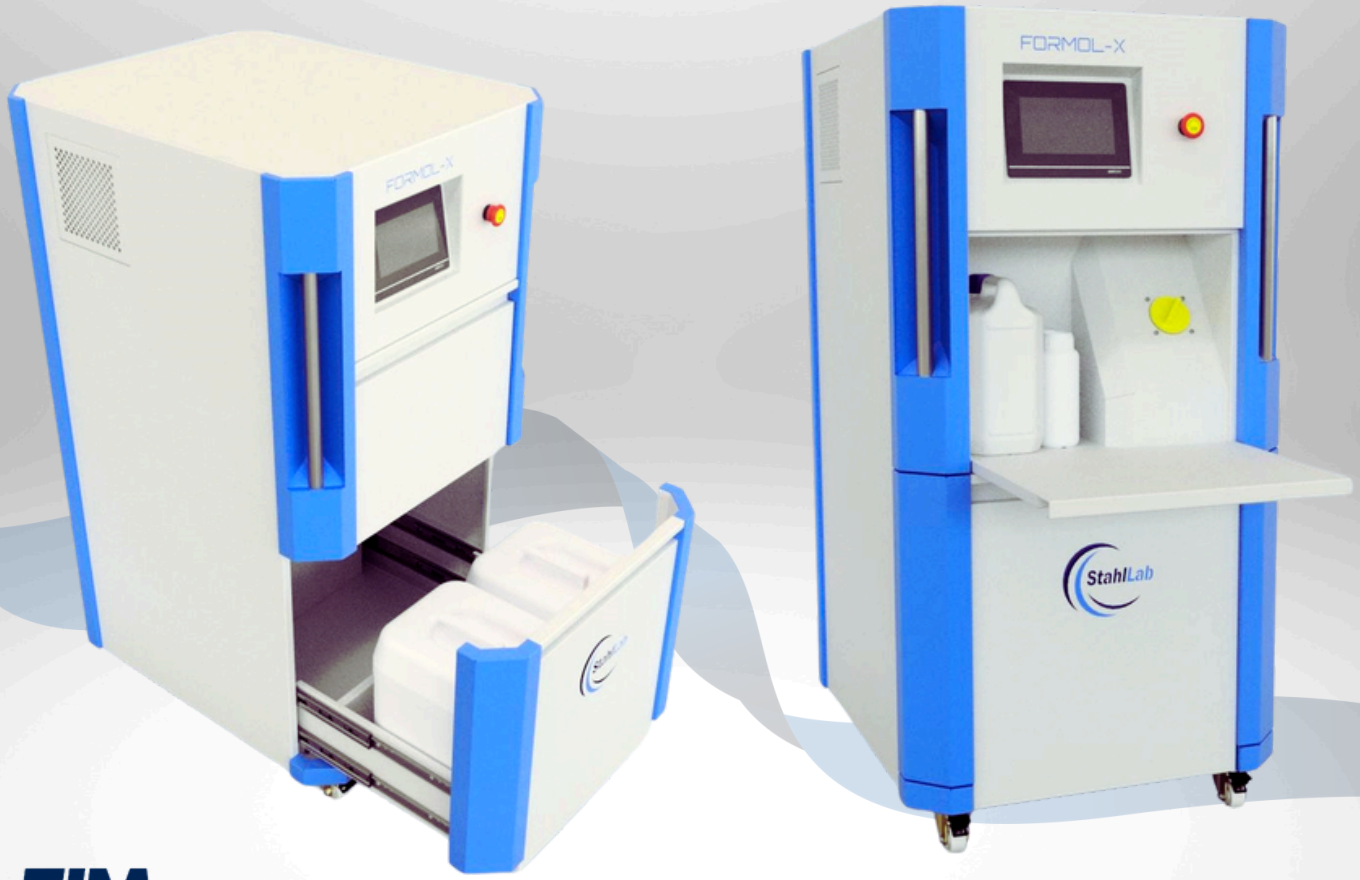

TİM TÜRKİYE İHRACATÇILAR MECLİSİ

MADE IN EUROPE

ISO 9001 CERTIFIED

WWW.STAHL-LAB.COM
INFO@STAHL-LAB.COM

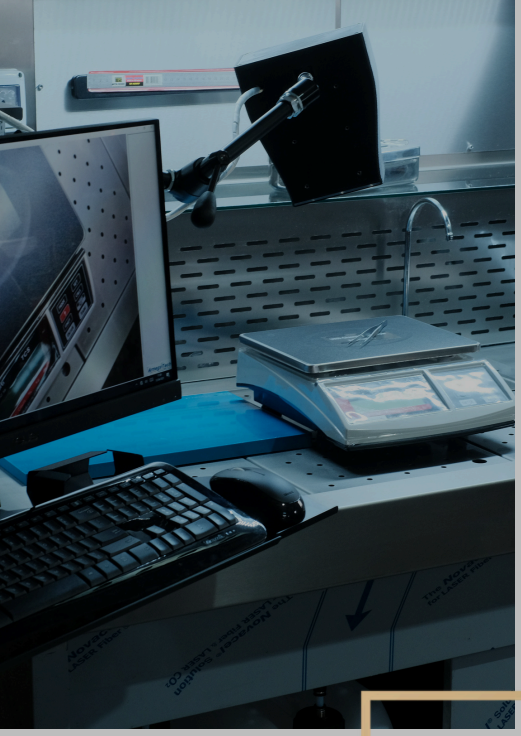

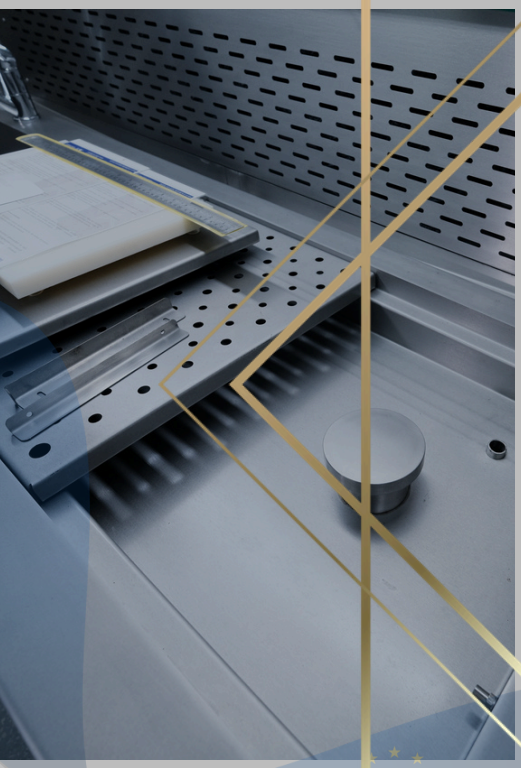



WWW.STAHL-LAB.COM
INFO@STAHL-LAB.COM

SERIE-1

GROSSING WORKSTATIONS

PREMIUM COLLECTION



Product #WS-1150

PATHOLYSIS FIX DOUBLE

Grossing Workstation for Pathology Laboratories
Engineered for Precision, Safety, and Efficiency
Our specialized Grossing Workstation is designed to meet the highest standards of pathology laboratories. Combining robust construction with advanced features, it ensures both operator safety and maximum productivity for up to two users working side by side.

Premium Stainless Steel Construction
- Worktop made from 316 stainless steel, 1.5 mm thick, offering exceptional resistance to chemicals.
- Remaining structure crafted from 304 stainless steel, 1.0 mm thick, providing strength, durability, and long-lasting performance.

Spacious & Functional Design
- Large working surface with perforated grid plates for effective airflow.
- Ergonomic layout ensures a comfortable and efficient working environment.

Advanced Ventilation System
- Integrated downdraft and backdraft systems protect users from harmful fumes.
- Ventilated base area enhances airflow for maximum safety.
- Three-zone ventilation system ensures comprehensive protection:
  a. Base Cabinet Ventilation
  b. Downdraft Ventilation
  c. Backdraft Ventilation

Efficient Rinsing System
- Eliminates fluid accumulation in the downdraft area.
- Maintains a clean, hygienic, and safe workspace.

Illumination Options
- LED or spotlight options ensure bright, long-lasting lighting.
- Halogen lamp option provides warm light, ideal for high-quality sample photography.

User-Friendly Touch Screen Control
- Intuitive touch screen panel for easy operation.
- Promotes a modern, hygienic, and technology-driven working environment.

Enhanced Air Quality
- Equipped with carbon filter / KMnO4 system to minimize formaldehyde fumes.
- Provides a healthier and safer laboratory environment.

Foot Pedal Controlled Functions
- Hot water
- Cold water
- Formalin dispenser (optional)

Standard Accessories

MADE IN EUROPE

ISO 9001 CERTIFIED
WWW.STAHL-LAB.COM
INFO@STAHL-LAB.COM

SERIE-1

GROSSING WORKSTATIONS

Model: Patholysis Fix 2000
Revision No: 241128001R01
Date: 28.11.2024

1. Product Description

The Grossing Workstation is a specially engineered laboratory system designed to meet the comprehensive requirements of modern pathology laboratories. It provides a safe, ergonomic, and highly efficient environment for macroscopic examination and dissection of specimens, while ensuring optimal operator protection from hazardous fumes.

2. Construction & Materials

2.1 Premium Construction

- Working Surface:AISI 316 Stainless Steel (2 mm thickness)
- High resistance to aggressive chemicals and corrosion
- Main Body Structure:AISI 304 Stainless Steel (1 mm thickness)
- Durable, hygienic, and long-lasting construction

2.2 Structural Design

- Modular upper and lower cabinet configuration
- Heavy-duty industrial construction
- Corrosion-resistant surfaces
- Stable base structure for vibration-free operation



3. Dimensions & Weight

3.1 Dimensions

- Upper Module:Width: 2050 mm
- Depth: 950 mm
- Height: 1450 mm
- Lower Module:Width: 2050 mm
- Depth: 900 mm
- Height: 1150 mm

3.2 Weight

- Upper Module: 260 kg (±5 kg)
- Lower Module: 200 kg (±5 kg)

4. Work Area & Ergonomics

- Large and efficient working surface
- Perforated grid plates for improved drainage and workflow
- Height-adjustable working plates
- Fold & slide mechanism for flexible usage
- Designed for simultaneous use by 2 operators
- Optional independent height adjustment for each operator

MADE IN EUROPE

WWW.STAHL-LAB.COM
INFO@STAHL-LAB.COM

SERIE-1

GROSSING WORKSTATIONS

5. Ventilation System

5.1 Advanced Airflow Design

- Downdraft Ventilation System
- Backdraft Ventilation System
- Provides effective removal of hazardous fumes from the working area

5.2 Ventilation Options

- Recirculating Exhaust System
- External Exhaust System
- Remote Exhaust System

5.3 Filtration

- Integrated carbon filter system
- Effectively removes formaldehyde and harmful chemical vapors
- Ensures a safe and compliant working environment

6. Rinsing System

- Integrated rinsing system prevents liquid accumulation
- Designed to maintain hygiene in the downdraft area
- Continuous drainage support

7. Illumination System

- Long-life LED lighting for clear visibility
- Optional halogen lighting for enhanced sample photography

8. Control & Operation

8.1 User Controls

- Automated or manual guillotine glass system
- Foot pedal control for hot and cold water

8.2 Optional Control Features

- Filter monitoring system with:
  - Visual warning indicators
  - Audible buzzer alerts
- Formalin waste tank control system for safe disposal

9. Safety Features

- Protection against inhalation of toxic fumes
- Optimized airflow system
- Chemical-resistant materials
- Enclosed working environment
- Compliance-ready design for laboratory safety standards

10. Packaging & Transportation

- Delivered in two main modules:
  - Upper workstation unit
  - Lower base cabinet
- Suitable for palletized transport
- Packaging dimensions as per technical drawing

MADE IN EUROPE

WWW.STAHL-LAB.COM
INFO@STAHL-LAB.COM

SERIE-1

GROSSING WORKSTATIONS

11. Applications
- Pathology laboratories
- Hospitals
- Research institutions
- Medical universities

12. Customization Options
- Fully customizable design based on laboratory requirements
- Optional accessories and configurations available
- Flexible ventilation and filtration solutions

13. Manufacturer Information
Company: Stahl Lab Laboratory Systems
Location: Istanbul, Türkiye
Website: www.stahl-lab.com

14. Approval
Production and delivery are subject to customer approval.



MADE IN EUROPE

SERIE-1

GROSSING WORKSTATIONS

STANDART ACCESSORIES

- Led light
- Formalin Tap
- Hot /Cold Water Tap
- Magnetic instrument holder
- Emergency Stop
- Waste Disposer Unit
- Paper Dispenser
- Glove Dispenser
- Polyethylene Dissecting Board

FILTERS

- PRE-FILTER
- KMnO4 / CARBON FILTER
- HEPA FILTER

FOOT PEDAL CONTROLLED FUNCTIONS

- HOT WATER
- COLD WATER
- FORMALIN DISPENSING SYSTEM

TOUCH SCREEN CONTROLLED FUNCTIONS

- VENTILATION SYSTEM
- FILTERS TIME SETTING
- WASTE DISPOSER
- LIGHT
- LIGHT INTENSITY
- FAN SPEED CONTROL
- FRESH AND WASTE FORMALIN CARBOY TRACKING

OPTIONAL ACCESSORIES

- Automatic Formalin Preparation & Dispensing Device
- Cpu stand
- Cassette holder
- Computer monitor and keyboard stand
- Splash shield
- Camera mount facilities
- Video camera facilities
- Dictation equipment stand
- Dictaphone
- Document holder
- Formalin waste tank
- EXTRA Magnifier
- PermanganeteFilter / Carbon filter
- Paper towel holder
- Measuring rule
- Strainer for Washing Sink
- Magnetic instrument holder
- Polyethylene dissecting board
- Glovebox holder
- Removable Trash Container
- UV Lamb
- Task Lamb

MADE IN EUROPE

ISO 9001 CERTIFIED
WWW.STAHL-LAB.COM
INFO@STAHL-LAB.COM

SERIE-1

GROSSING WORKSTATIONS



AISI 316 QUALITY REST CONSTRUCTION

316 Stainless Steel Quality 2mm construction of rest



AISI 316 QUALITY WORKING PLACE

316 Stainless Steel Quality 2mm construction for working place which has effective resistance for chemicals.

PERFORATED GRID PLATES ON WORKING TOP

Large and effective working area with Perforated Grid Plates

DOWN-DRAFT & BACK-DRAFT VENTILATION

Downdraft & Backdraft ventilation that keeps the user safe from inhaling chemicals during working



STANDARD DIMENSIONS (CUSTOMIZABLE)		
WIDTH	DEPTH	HEIGHT
1200	750	2250
1500	750	2250
1800	750	2250
2000	750	2250
2500	750	2250

MADE IN EUROPE

WWW.STAHL-LAB.COM
INFO@STAHL-LAB.COM

SERIE-1

GROSSING WORKSTATIONS

SINK DIMENSIONS for w:2000 (Customizable)		
WIDTH	DEPTH	HEIGHT
350	400	180

FORMALIN SINK DIMENSIONS		
WIDTH	DEPTH	HEIGHT
150	150	60

PERFORATED WORKING PLATE APPRX	
WIDTH	DEPTH
600	400

ELECTRICAL REQUIREMENTS	220-230 VAC 50-60 HZ
MAX POWER	1300W

DRAIN - WATER INLETS
Ø50 - 3/8"

DUCT CONNECTION
Ø250-315



MADE IN EUROPE

WWW.STAHL-LAB.COM
INFO@STAHL-LAB.COM

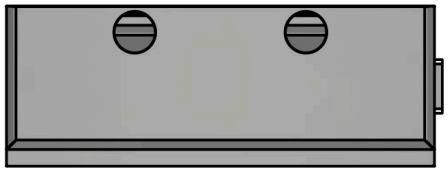

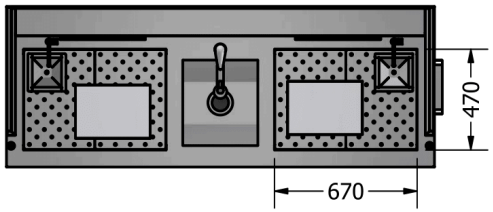

SECTION A-A
SCALE 1 / 25

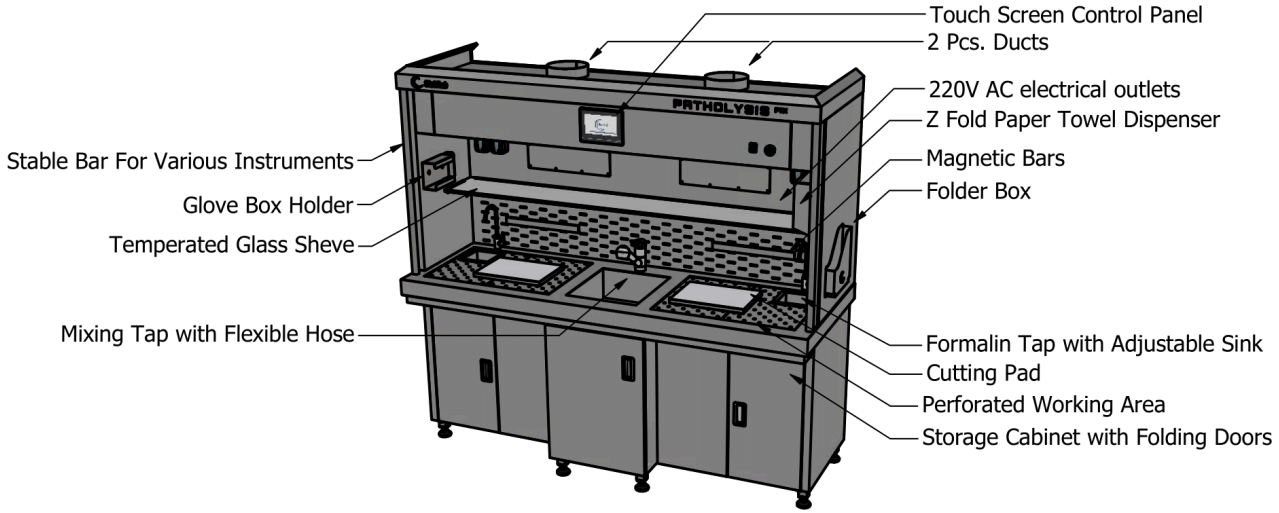

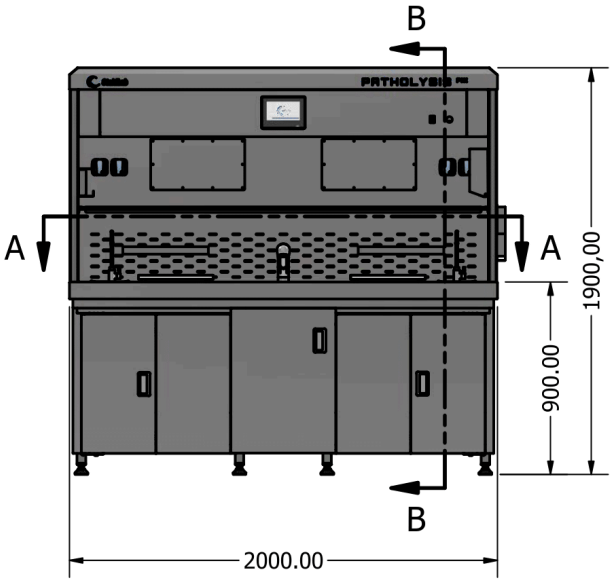

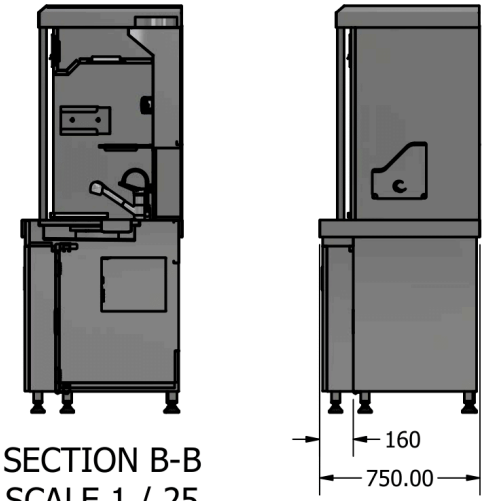

SECTION B-B
SCALE 1 / 25

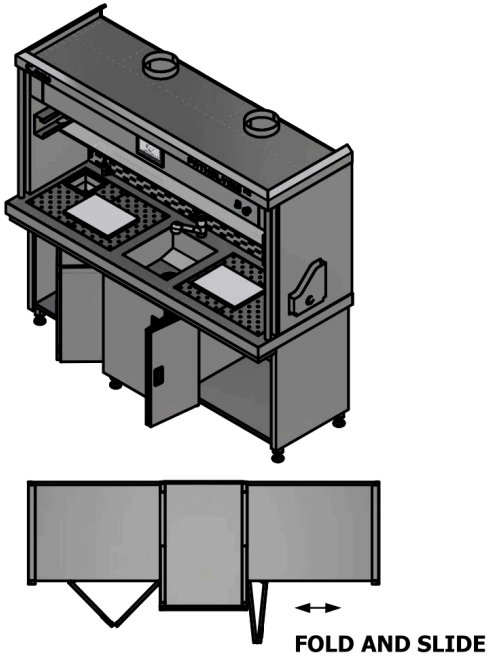

FOLD AND SLIDE

PRODUCT NAME	PATHOLYSIS FIX 2000	DATE	14,11,2024	CUSTOMER APPROVAL	**STAHL LAB** LABOARTUVAR SİSTEMLERİ SANAYİ VE TİCARET LİMİTED ŞİRKETİ ATATÜRK MAH. ERTUĞRUL GAZİ SK. METROPOL İSTANBUL SİTESİ C1 B. NO 2B/376 ATAŞEHİR - İSTANBUL TEL: +90 216 641 61 27 info@stahl-lab.com www.stahl-lab.com WP: +90 546 287 69 45
PACKAGE DIMENSIONS	W:210 D:90 H:120 UPPER PART W:210 D:90 H:110 LOWER PART CM	SERIAL NO.	241114001		
WEIGHT	210,00 (±5) KGS	REV. NO.	241114001R01		
TOTAL WEIGHT	210 (±5) UPPER PART WITH BOX 190 (±5) LOWER PART WITH BOX KGS	REV. DATE	14,11,2024	STAMP / SIGNATURE	









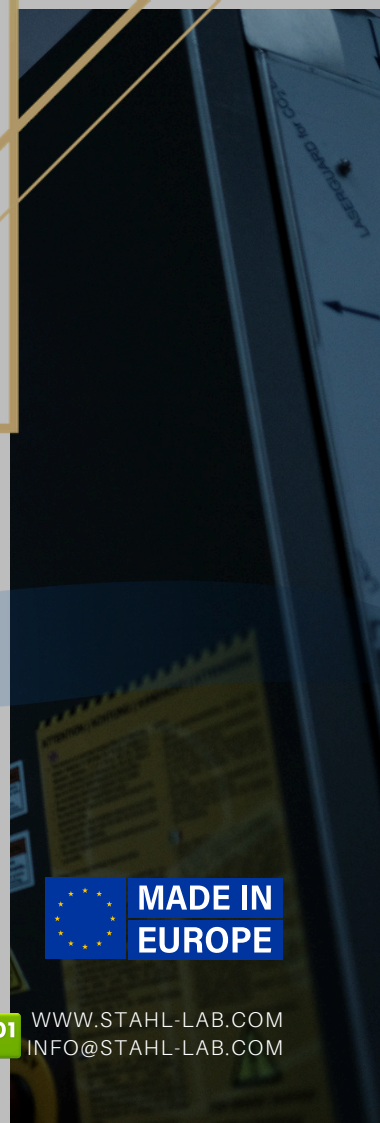

MADE IN EUROPE

CE ISO 9001 CERTIFIED

WWW.STAHL-LAB.COM
INFO@STAHL-LAB.COM

NEW

ARRIVAL

NEUTR-X

FULLY AUTOMATED FORMALIN
NEUTRALIZATION DEVICE

NEW

FORMALIN EXPOSURE?
no.



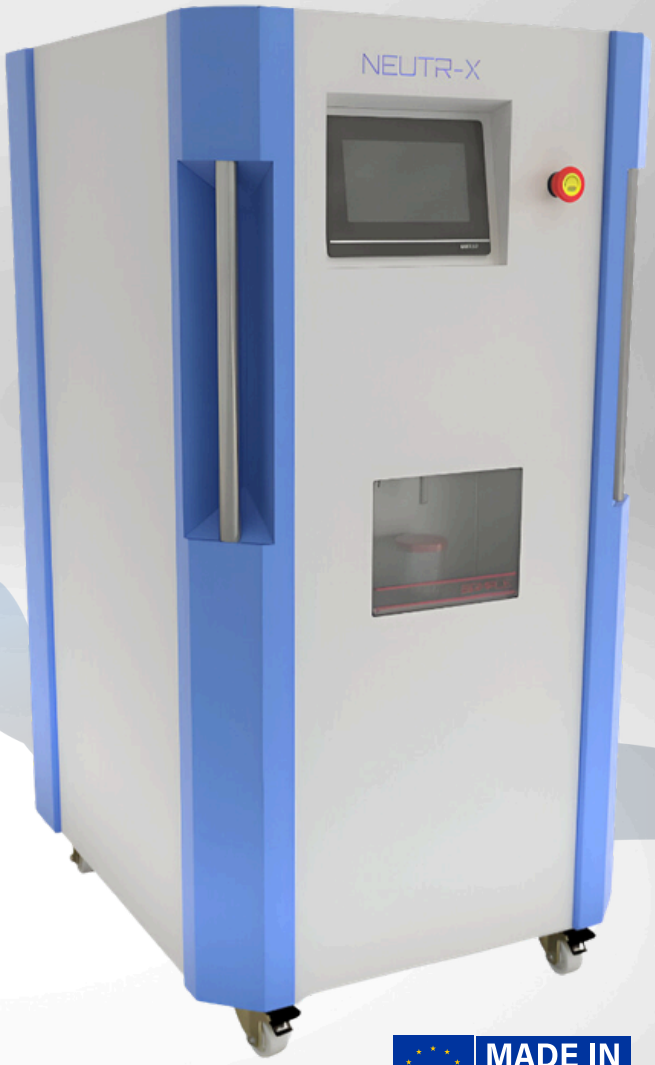

TİM
TÜRKİYE
İHRACATÇILAR
MECLİSİ

MADE IN EUROPE

ISO 9001 CERTIFIED

WWW.STAHL-LAB.COM
INFO@STAHL-LAB.COM



NEW ARRIVAL

#Autopsy&EmbalmingStation

GET THE QUOTE!

MADE IN EUROPE

ISO 9001 CERTIFIED
WWW.STAHL-LAB.COM
INFO@STAHL-LAB.COM









ISO 9001 CERTIFIED
WWW.STAHL-LAB.COM
INFO@STAHL-LAB.COM

CATALOGUE

YEAR 2026

"STRENGTH IN DESIGN, CLARITY IN DIAGNOSTICS."

Stahl-Lab

LABORATORY SYSTEMS